Magazine of Civil Engineering. 2020. 96(4). Pp. 3–14

Magazine of Civil Engineering

ISSN 2071-0305

journal homepage: http://engstroy.spbstu.ru/

DOI: 10.18720/MCE.96.1

PFRP structures under the predominately short term load

M.A. Salakhutdinov[a], L.R. Gimranov[a], I.L. Kuznetsov[a], A.E. Fakhrutdinov[b], L.M. Nurgaleeva[c]
[a] Kazan State University of Architecture and Engineering, Kazan, Russia
[b] Joint-stock company "Special Economic Zone "Innopolis", Innopolis, Russia
[c] LLC "Tatneft-Presscomposite", Elabuga, Russia

** E-mail: lider-kazann@yandex.ru*

Keywords: pultruded FRP profiles, bolted joints, experimental studies

Abstract. The subject of the study is a load bearing capacity of building structures from fiber reinforced polymer (FRP) shapes under the short term load, such as snow load and occupancy load, which significantly exceed values of dead load. Experimentally determined actual strength and stiffness under the short term load of following structural members and connections: of I-beams; bolted connections under the bearing load with different directions of material's pultrusion relatively to applied force; connections transferring load via contact surfaces, at the ends of structural members, oriented normally to the direction of pultrusion; webs of the I-beams under locally applied load perpendicularly to the direction of pultrusion. Experimental studies deemed following results. Minimal flexural strength of beams obtained experimentally is on average 1.25 times higher than values of flexural strength determined theoretically. Strength of different types of connections obtained after testing procedures is on average 1.35–2.5 times higher of its theoretical values. Conducted studies allow widening of the field of an applicability of FRP profiles as structural members of small scale structures subjected to predominantly atmospheric or live loads, for instance, tiered and covered seating pavilion. Such types of structures subjected to short term load allow to utilize strength and stiffness of their structural members more deeply.

1. Introduction

Structures made from fiber reinforced polymers have become more common in building construction practice. Some structural members from fiber reinforced polymers are being casted right in the construction site using infusion methods with mechanical properties such as strength from 65-90MPa and elasticity modulus from 3100 MPa up to 4000 MPa [1]. However, practice of production certain nomenclature of profiles of different shapes found its place in a new emerging manufacturing method based on pultrusion process. Pultruded fiber reinforced polymers (PFRP) are made of strand rovings inside of matrix from polymer. PFRP have mechanical properties similar to that of the wood in its orthotropic behavior and with strength in longitudinal direction up to 250MPa and elasticity module in the same direction up to 26000MPa.

The strength to density ratio, commonly used as criterion of the material effectiveness in load bearing structures, for PFRP in longitudinal direction can reach up to 250/1.85 = 135 that is higher than for the steel 250/7.85 = 31.8 and wood 130/0.5 = 26.

Today more than 300 firms worldwide are involved in production of fiberglass profiles made by pultrusion process. Significant share of production volume in those companies is accommodated for lattice flooring, windows and doors profiles, handrails and fence, stairs, manholes, noise barriers, outdoor lighting poles, cable channels and antennas (Figure 1).

Salakhutdinov, M.A., Gimranov, L.R., Kuznetsov, I.L., Fakhrutdinov, A.E., Nurgaleeva, L.M. PFRP structures under the predominately short term load. Magazine of Civil Engineering. 2020. 96(4). Pp. 3–14. DOI: 10.18720/MCE.96.1

Figure 1. Examples of products made from fiberglass profiles.

In addition to already mentioned nomenclature of various products fiberglass profiles for building construction industry in different shapes (hollow sections, angles, channels, I-beams, T-beams etc.) are produced. Structures of suspended galleries, footbridges and crossings etc. are known to be made of fiberglass-reinforced profiles produced by pultrusion process [2–4].

Structural analysis of load bearing members of structures made from pultruded fiberglass reinforced profiles (PFRP) is performed predominately on the basis of industry standards and design manuals of individual manufacturers [5] which are not obligatory for every participant [6]. Main types of joints being used in the field are bolted joints [7–9] and bolted joints with different shapes of steel cleats [10–12].

Despite of the existing results of research and normative codes (mostly US and Europe based) versatile service conditions render it difficult to apply codes mentioned above to the all structural shapes, loading cases, local standards of production and regions of location. Regarding to the examples of structures from PFRP and the tendencies in applicability of PFRP, apparent tilt to the structures of pedestrian crossings [13], bridges [14] and special engineering structures [15, 16] has become obvious. This study addresses issues related to the load conditions of structural members and joints those ratio of values of short-term load to the values of dead load is equal 4 and higher (for instance design snow load at most parts of Russia exceeds 1 kPa and in some regions can be up to 5.6kPa). Also structural forms, structures and joints of members of the structures meant to be subjected mostly to short-term load were reviewed. Design of joints of the structural members with steel plates acting as load transferring members extensively studied in following papers [10–12]. Various types of beam to column connections are also extensively studied [17, 18]. Bolted connections play pivotal role in designing structures made of PFRP [19–21]. Different local effects in bolted connections were meticulously scrutinized in [22, 23]. PFRP members such as built up columns under the compression load were subject of research in [24]. The point of interest of a current study was design solutions of connections without additional steel force transferring plates. End use conditions of structures in current studies supposed to be such that short-term load applied either to the roof system or to the other members of the structures cause stresses significantly higher than that caused by dead load. Short term load duration also reduces influence of a load duration factors on the strength of structural members allowing higher stress levels. Nevertheless, required strength of a structural member was significantly lower than actual strength obtained from tests experiments. Structural shape designed during current study covered seating pavilion with tiered rows, assumed short term loads from occupancy during events at summertime period and snow load up to 3.5 kPa during winter periods with almost excluded load from occupancy. Both types of mentioned loads significantly exceed dead load and have short term nature. Also supposed function and location of a mention seating pavilions also widens the field of applicability of PFRP allowing usage during events at summer camps which service during winter period is extremely constrained. Design of joints with absent of steel plates provides uniformity of inside connection displacements during temperature changes ranging from -35 ˚C to 60 ˚C.

PFRP have some competitive advantages:

- strength (normative tensile strength up to 380MPa);
- resistance to corrosion and to the chemically aggressive environment;
- light weight(material density 1850 kg/m^3);
- dielectric properties;
- reduced service cost of the surface area.

Mechanical properties of PFRP which are the subject of this studies are shown in table1.

Table 1. Mechanical properties of PFRP

Mechanical properties of material	Description	Unit	Value
1	2	3	4
Longitudinal ultimate tensile strength(min)	$R_{t,L}^{H}$	MPa	380
Longitudinal elasticity modulus in tension(min)	$E_{t,L}^{H}$	GPa	28
Longitudinal ultimate compressive strength(min)	$R_{c,L}^{H}$	MPa	270
Longitudinal elasticity modulus in compression (min)	$E_{c,L}^{H}$	GPa	20
Shear modulus , (min)	G_{LT}^{H}	GPa	3
Transverse elasticity modulus in compression (min)	$E_{c,T}^{H}$	GPa	7
Poisson Ratio (min)	v_{TL}		0.1

Nevertheless more wide usage of PFRP as structural members of the structures is constrained by the lack of regulating codes and required experience. Actually only first steps in direction of proliferation of structural PFRP into building industry had been made.

Therefore the substantiation of possibility of more wide usage of the PFRP as structural members of the different load bearing structures is very important.

The objectives of this study are:

- establishing peculiarities in working under the predominantly short-term load of PFRP structures and joints of structural members;
- explore the possibility of widening field of applicability of PFRP in structures of seating pavilions.

To reach mentioned objectives following tasks should be accomplished:

- structural shape of interest should be introduced as an example which widens field of applicability of PFRP structures;
- experimental data should be gathered concerning of load bearing capacity of joints of the PFRP structures under the short-term load;
- joints of structural members of PFRP structures without web cleats should be studied and assessed as main types of connections in mentioned structures.

First steps in pushing envelope further in the field of PFRP applicability are being made in the form of design projects and already erected structures. Vivid example of this is the covered seating pavilion on 200 seats with 5 tiered rows for sports venues. At least 11 of such pavilions were erected in different locations.

The structural shape of this covered 5×22.3 m seating pavilion (Figure 2) includes following structural members and systems. Columns installed with grid 2.375×4.75 m, in aisle area – 1.1 m, roof system include primary and secondary roof beams, purlins, brace members (Figure 3). Seating part of pavilion includes stringers, seating beams, lattice flooring for seats. All mentioned structures are made of PFRP. Columns, primary and secondary beams have I-beam cross section with dimensions 200×200×15×15 mm, purlins – channels of 150×70×8×8 mm, stringers have paired channels cross section of 200x100x10x10 mm, braces and beams for seats made of 75×75×6×6 mm and 105×105×13×13 mm angles, lattice flooring has spacing of 38x38 mm. Joint gusset for stringers and roof beams were supposed to be made by splitting channels and I-beams cross sections in half resulted in T-beams cross sections and angles of required geometry.

Figure 2. Spatial view of covered 5x22.3m seating pavilion on 200 tiered seats.

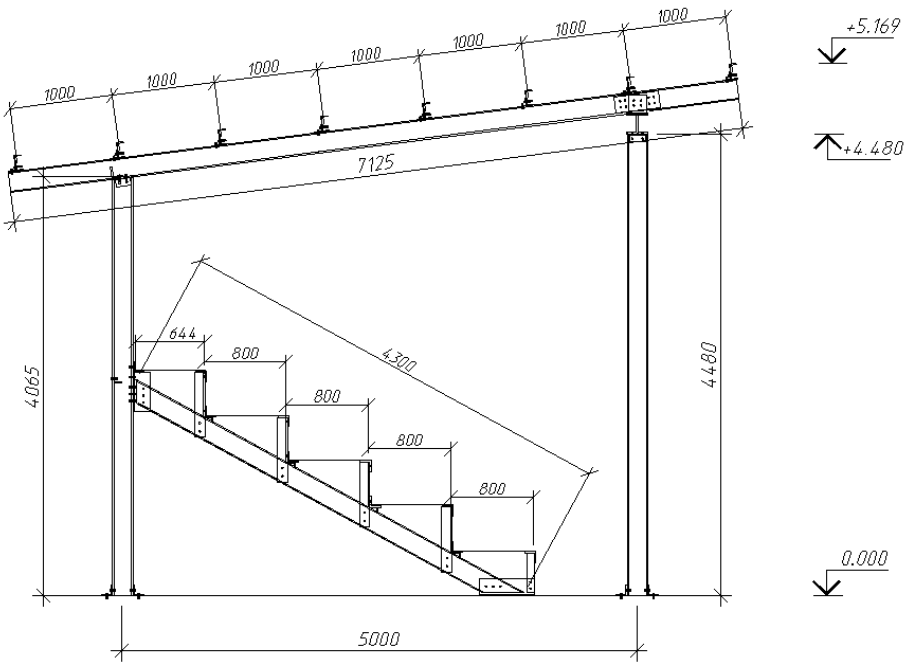

Figure 3. Side view of the seating pavilion.

Roof of the seating pavilion covered with steel deck connected to the purlins with bolts. Bolted connections of seating pavilion have galvanized coatings bolts M12 or M16 with strength grade of 8.8. During designing of the seating pavilion calculations of load bearing capacity of PFRP members considered snow load of 3.2 kPa, wind load of 0.3 kPa and live load at 4 kPa.

2. Methods

Some compositions of structural members of the pavilion have very innovative fulfillment and structural form that can be tested by only experimental approach. For example, some structural members transfer load via bolted connections in longitudinal and perpendicular directions to the grains and some via direct contact of surfaces in members ends.

In order to confirm the results of structural analysis made during designing of a pavilion and also to obtain actual data on load bearing capacity of structural members and joint solutions experimental tests were conducted. Those test included flexural bending of I-beams (Figure 4), compressing test of joints parallel to the direction of pultrusion and also in the lateral direction (Figure 5, Figure 6), compressing tests of end faces of profiles and the web of the I-beams in perpendicular to the direction of pultrusion (Figure 7, Figure 8). In structural analysis of columns of the covered seating pavilion results of experimental studies [24] were taken in consideration.

Experiments were conducted with 2000 kN hydraulic press (Figure 4), 500 kN electromechanical press (Figure 6). Mentioned presses were equipped with force measuring devices and were connected to the PC and operated by it displaying results of the test in real time.

In order to determine experimental values of load bearing capacity of the PFRP as flexural elements, I-beam with cross section dimensions 200 mm – height, 15 mm – web and flanges thickness, 200 mm – width was simply supported (1550 mm span) and loaded by local force at the middle of the span. Test is shown in Figure 11.

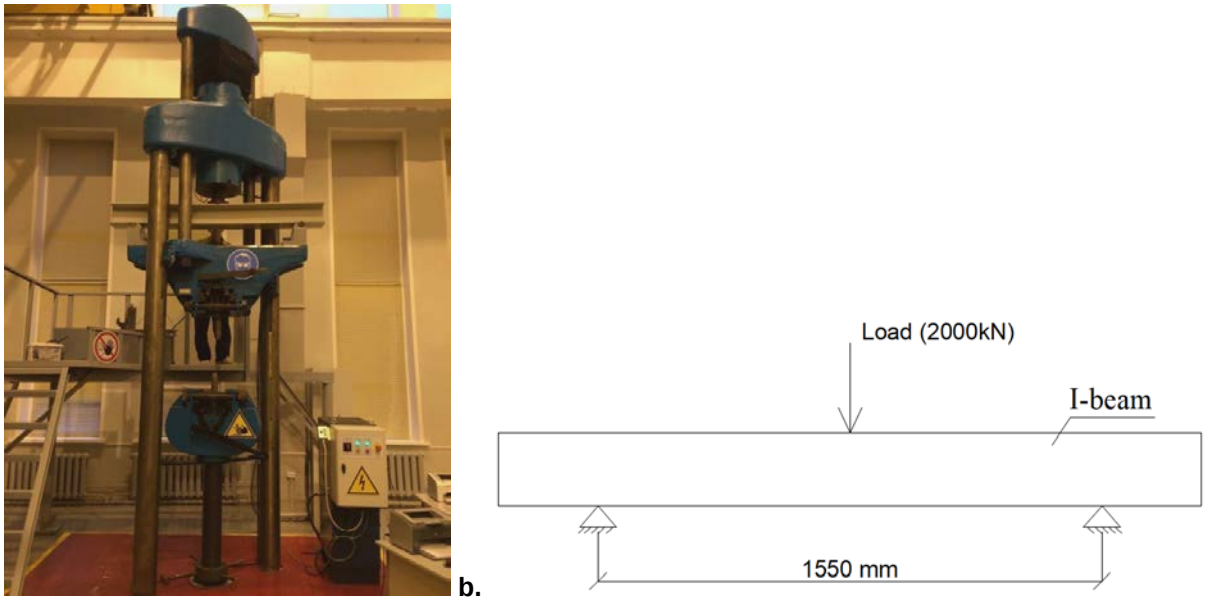

Figure 4. Flexural bending test of I-beam from PFRP: a –hydraulic press; b – scheme of a loading.

To determine load bearing capacity of bolted joints two types of connections were made. First one has two bolts and meant to be tested for compression load perpendicular to the direction of pultrusion (Figure 5a). Second type of joint was also a connection with two bolts only with compressing load applied parallel to the direction of pultrusion (Figure 5b). Test is shown in Figure 6.

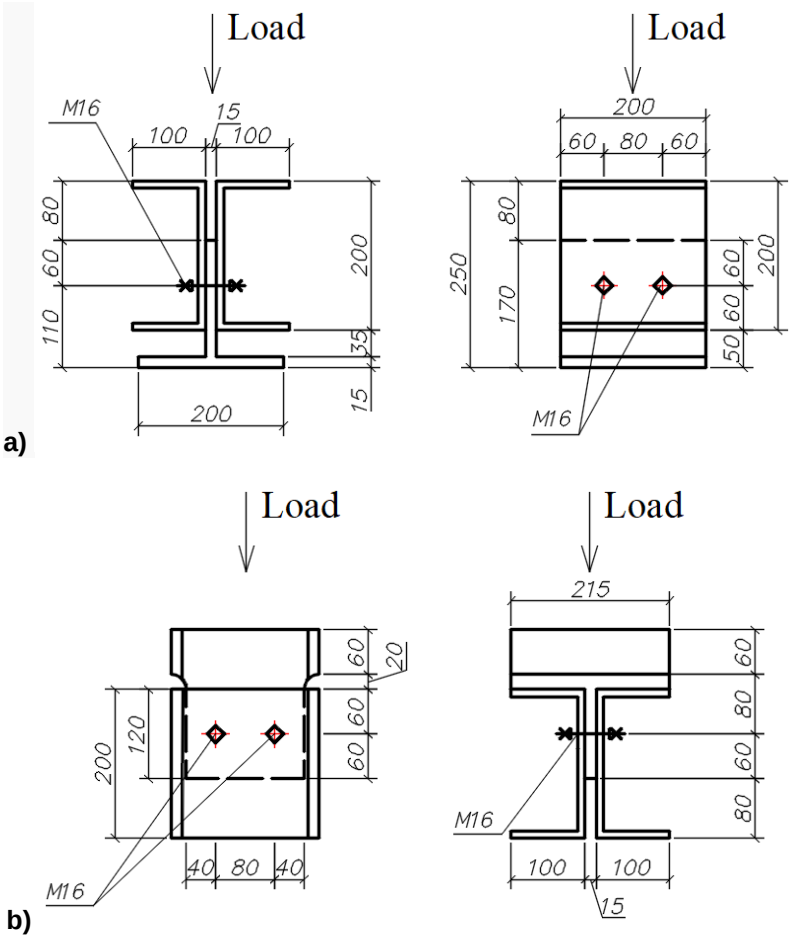

Figure 5. Bolted connection of the PFRP with two bolts: a) test with load perpendicular to the direction of pultrusion; b) test with load parallel to the direction of pultrusion.

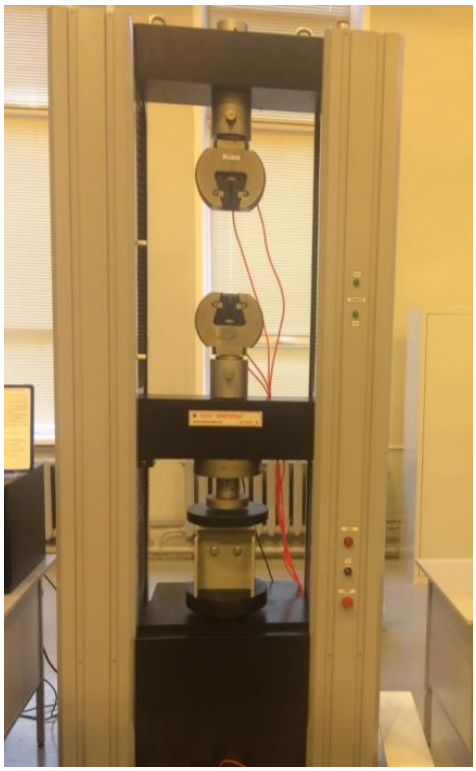

Figure 6. Test of the connection with two bolts with load applied perpendicular to the direction of pultrusion.

In the main frame of the study tests of the web of the I-beam during action of local load parallel and perpendicular to the direction of pultrusion were conducted. Load was acting on the span of a web of the I-beam with length of 200 mm. Thickness of the web and flanges of the I-beam was 15 mm, with width of the I-beam 200 mm. The process of test is shown on the Figure 7.

Figure 7. Test of the web of the I-beam under the local compressive load.

During final stage of the experimental study face ends of the I-beam profile was tested for crumpling under compressing load. Tested samples were 200 long pieces of I-beam profile with height of 200 mm, thickness of the web and flanges 15 mm and width of 200 mm.

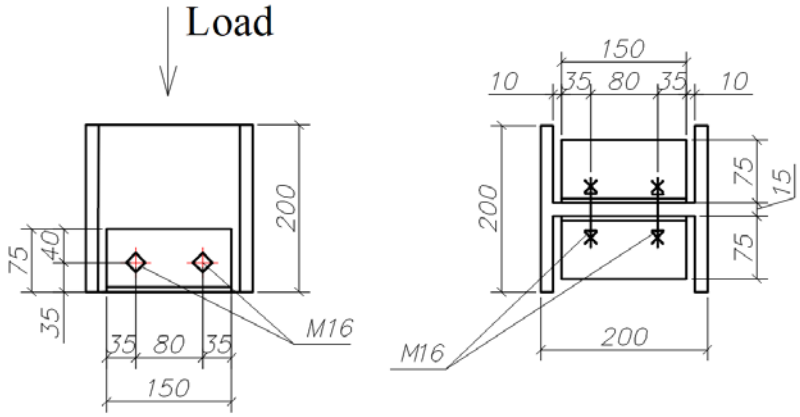

Figure 8. Sample of the I-beam profile during test on crumbling of the face ends under the compressing load.

As a result of experimental study actual values of load bearing capacity of the possible structural members and joints were obtained. Comparison of the experimental and theoretical values calculated earlier was conducted.

3. Results and Discussion

Accordingly, to established plan of the study a range of experimental tests were held. Full sized test of I-beam profile with span 1.5 m in case of flexural bending was conducted. Diagram showing dependence between maximum vertical deformation of the beam and gradually ramped load is depicted in Figure 9.

Actual and theoretical ultimate loads were P_{ult} = 143.14 kN and P_{theor} = 114.14 kN respectively. Hence safety factor could be assessed at 1.25 that is experimental load values is 1.25 times bigger that theoretical as also shown in [25].

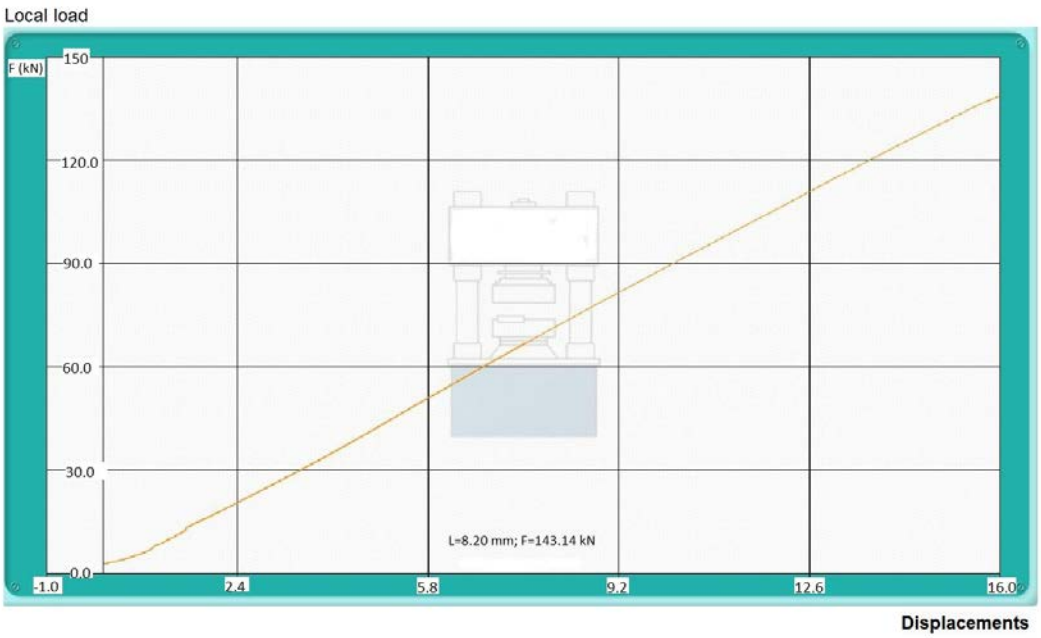

Figure 9. Diagram of vertical displacements under the local load applied at the middle of the span.

Most of the studies concerning of load bearing capacity of PFRP structures [10] focus on ultimate load that joints are able to transfer. This study nevertheless also includes test of a beam in loading case scenario close to its service period. Tested solutions of joints also were explicitly linked to certain structural shape which excluded steel web cleats in case of predominately short term load. Tested connections were also more structurally similar to those with cleats from FRP material. FRP cleats were fabricated from I-beams utilizing longitudinal cut alongside of the web. The main difference was that cleats were produced as a single piece whereas stringers were built up members. Described web cleats presumably have different stress distribution such that results of [11] study couldn't have been directly utilized. The effects of action on column flanges presumed to be similar to those described in [11]. The differences in stress distribution inside of web cleats from PFRP angles comparatively to the one described above supposedly are all due to gap between angles.

Displacements of the angles in gap area are presumably more tangible than those in the area of connection between flanges and web of T-shape cleats. Failure mode of web cleats in the heel area also apparently depends on this gap as shown in [12]. Mentioned above peculiarities were taken into account during development of connections for the experimental studies. Also one of the important aspects of experimental studies were tests of specimens of girders from I-shapes subjected to local force acting on the top flanges of the girders (Figure 7) and compressing tests of short specimens of I shapes acting as column members (Figure 17). Short length of the column specimens was due to the goal of avoiding of possible buckling effects. Main purpose was to focus on the bearing strength of the ends of specimens. Bearing strength of specimens around hole area was also a subject of interest. Connections in tested specimens were developed in such a way that probability of lamination failure or cracks in areas of connections between flanges and webs was reduced to the minimum.

The following results were obtained after the experimental tests of joints with two bolts. For joints with load applied perpendicular to the direction of pultrusion actual ultimate compressing force is amounted for $S_{b,90}$ = 57 kN, in case of parallel applied compressive load is $S_{b,0}$ = 83 kN. Theoretical values of load bearing capacity for joints mentioned above for the perpendicular and parallel cases of applied load relatively to the direction of pultrusion are $S_{b,90}$ = 22.4 kN, $S_{b,0}$ = 48 kN respectively. Thus conducted experimental studies has shown that an actual experimental ultimate compressive load for joints exceed one that calculated theoretically for the perpendicular case of applied load up to 2.5 times, for the parallel case – 1.7 times. Considering duration of applied load methods used to calculate theoretical values can be utilized in engineering calculations. Results of the tests are depicted in diagrams shown in Figures 10–11. Diagrams show ultimate values of the compressive load P_u and summarized displacements in the joint Δ. Failure of the joint under the ultimate load is shown in Figures 12–13.

Theoretical values of ultimate load were devised from expressions in the related codes. The values of design strength take into consideration several aspects ranging from duration of the load, load-stress state and specific material properties to the stress level during service period. Tangible difference between experimental values of ultimate load and theoretical values of critical load expressed from design strength for each load case, thus comprised of safety factors, and material resistance factor. Latter factor depends on mechanical properties of material of specific PFRP producer whereas safety factor usually additionally increased to accommodate stresses near design material resistance during service period. Therefore the case of stresses reaching near limit of design material resistance during only very limited amount of service time is ought to be argued. All tested specimens of bolted connections showed failure mode related to the failure of material around hole area. Failure of material in connection of flanges and webs occurred only during tests of local force acting on flanges of I-shape girders.

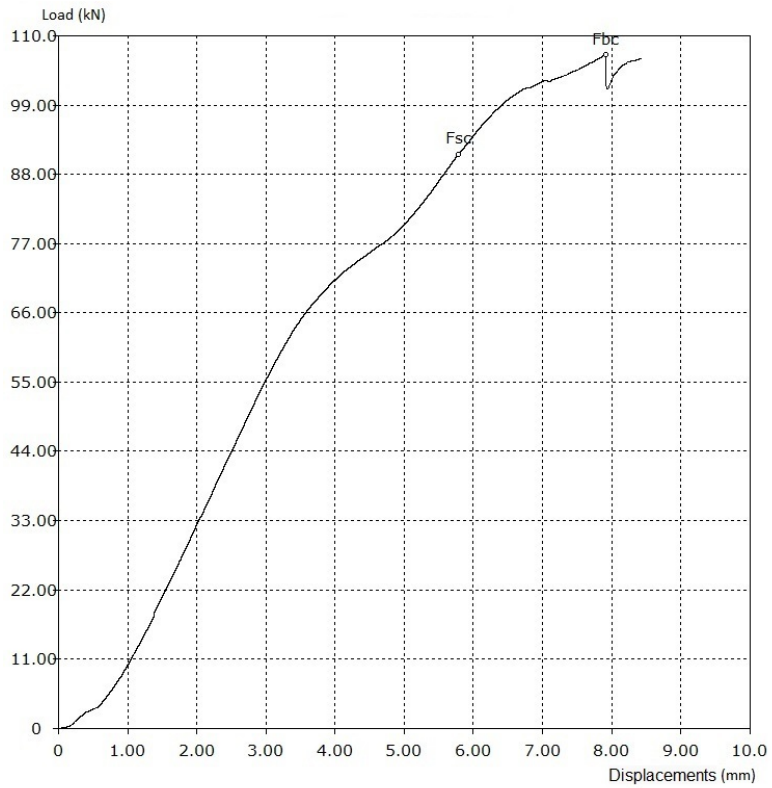

Figure 10. Diagram of displacements Δ (mm) in joints with two bolts under the compressing load *Pu* (kN) applied perpendicular to the direction of pultrusion.

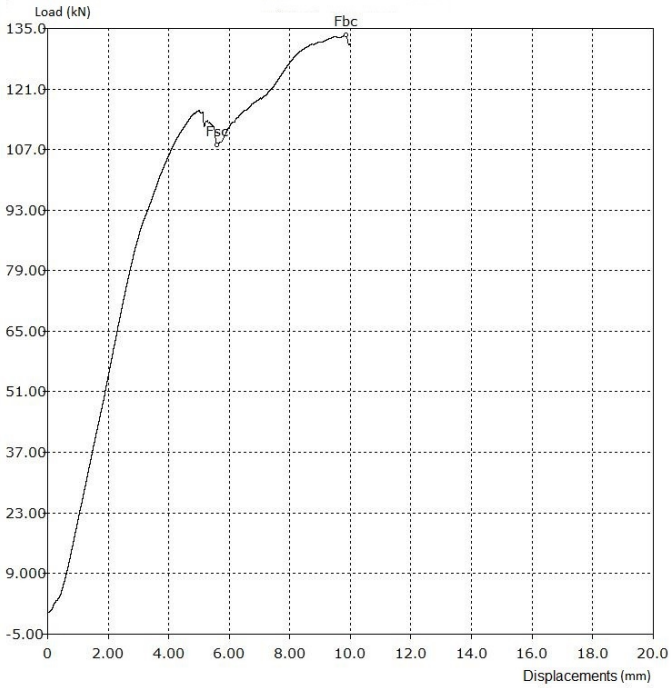

Figure 11. Diagram of displacements Δ (mm) in joints with two bolts under the compressing load Pu (kN) applied parallel to the direction of pultrusion.

Figure 12. Failure of joints under the compressing load in case of load applied perpendicular to the direction of pultrusion.

Figure 13. Failure of joints under the compressing load in case of load applied parallel to the direction of pultrusion.

Test results of the web of the I-beam under the local compressing load are shown as a diagram in Figure 14. Failure of the web under the compressing load is shown in Figure 15. Test has shown that load bearing capacity of the web fragment of the I-beam (Figure 7) under the locally applied load is 130 kN. That fact makes possible design solutions of the joints where secondary beam is installed onto primary beam above causing local stresses in the web of the primary beam.

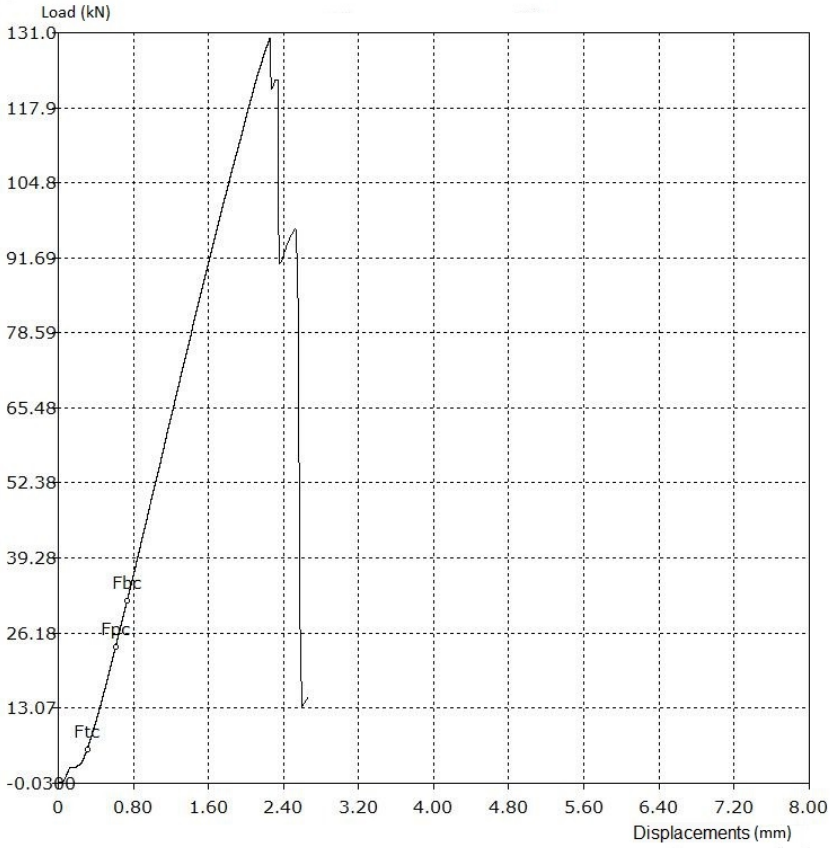

.

Figure 14. Diagram of local displacements Δ (mm) of the web of the I-beam under the local compressive load *Pu* (kN).

Figure 15. Failure of the web of the I-beam under the ultimate local compressive load.

Tests of the face ends of the PFRP are shown as a diagram in Figure 16. Failure mode of the I-beam is shown in Figure 17.

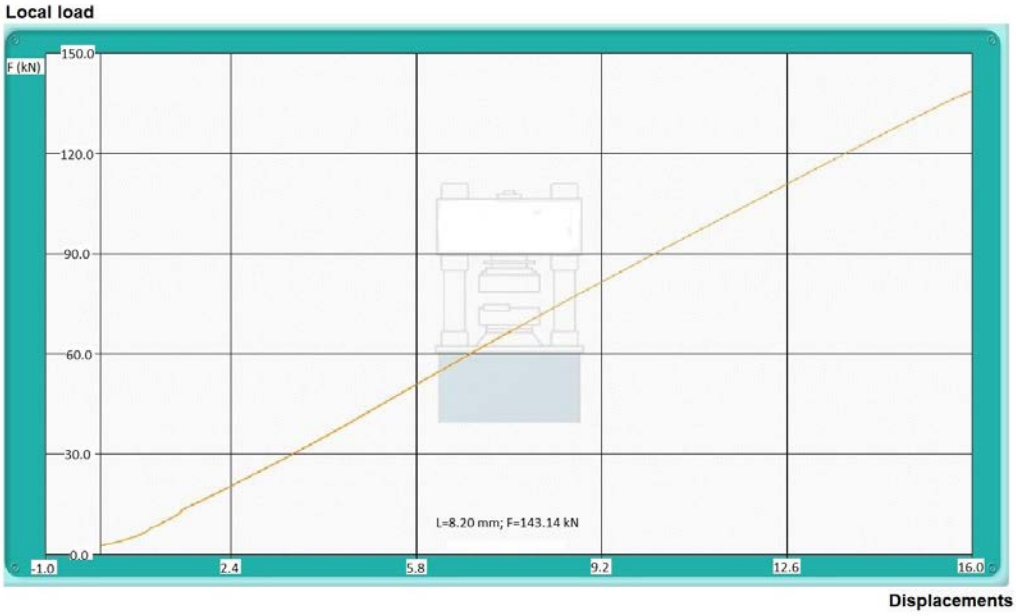

Figure 16. Diagram of displacements Δ (mm) under the crumbling load Pu (kN).

Figure 17. Failure mode of the I-beam under the crumbling load.

Tests have shown that ultimate compressing load was P_{ult} = 692 kN. Theoretical values of ultimate compressive load is P_{ult} = 513 kN. Thus actual experimental values of load bearing capacity of the I-beam under the crumbling load are higher than theoretical values on 35 %.

Experimental test of structural members in flexural bending have shown that limit state for the girder with mentioned span to dept ratio is determined by failure of material due to flexural stress and not by torsional buckling of the girder, which also confirmed by test data presented in [23].

Material failure mode around holes for the bolts in longitudinal and transverse directions, is consisted with 1st and 2nd types of failure described in [2], and confirms that patterns of bolts had been chosen correctly.

4. Conclusions

Conducted experimental studies confirmsafety of the designing decisions and possibility of widening of the field of an applicability of PFRP as structural members of different structures.Although tested samples were subjected only to a short term load obtained during the tests safety factors allows to assume acceptable safety margin of the whole structure during its exploitation term.

After conducted studies following conclusions can be made:

– - experimental test confirmed designing decisions and sufficient load bearing capacity of the structural members made from PFRP and joint solutions connecting these structural members;

- - obtained values of yield strength to the ultimate strength ratios were:
  a) in case of members in bending – 0.89
  b) in case of compression (buckling excluded) – 0.74
  c) in case of bending of flanges of the I-beam in lateral direction – 0.52
  d) in case of bolted connection with force transfer in longitudinal direction – 0.6
  e) in case of bolted connection with force transfer in longitudinal direction – 0.59
- - studies make case for more wide application of PFRP as structural members of different structures.

References

1. Nekliudova, E.A., Semenov, A.S., Melnikov, B.E., Semenov, S.G. Experimental research and finite element analysis of elastic and strength properties of fiberglass composite material. Magazine of Civil Engineering. 2014. 47(3). Pp. 25–39. DOI: 10.5862/MCE.47.3
2. Bank L.C. Composites for construction: structural design with FRP materials. New Jersey, 2006. 567p. URL:https://ru.scribd.com/doc/144235738/Composites-for-Construction-Structural-Design-With-FRP-Materials-Malestrom (date of reference 07.11.2018).
3. Van Den Einde, L., Zhao, L., Seible, F. Use of FRP composites in civil structural applications. Construction and Building Materials. Vol. 17. No. 6-7. 2003. Pp. 389–403.
4. Dubinchik, E.V., Pastushkov, V.G., Yankovskiy, L.V. Osobennosti primeneniya kompozitnykh materialov v stroitelstve [Some aplication aspects of composite polymer materials in the bulding construction]. Modernizatsiya i nauchnyye issledovaniya v transportnom komplekse. 2013. Vol. 3. Pp. 175–181.
5. Kayumov, R.A., Sharafutdinova, A.A. Ob otsenke dolgovechnosti stroitelnykh konstruktsiy iz stekloplastika [About an estimation of operational durability of building designs from fiberglass]. Izvestiya kazanskogo gosudarstvennogo arkhitekturno-stroitelnogo universiteta. 2017. No. 2(40). Pp. 114–123.
6. Ascione, L., Caron, J., Godonou, P., and etc. Prospect for new guidance in the design of FRP. Joint Research Centre. Institute for the Protection and the Security of the Citizen. Italy, 2016. 176p. URL:https://ec.europa.eu/jrc/en/publication/eur-scientific-and-technical-research-reports/prospect-new-guidance-design-frp (date of reference 07.11.2018).
7. Qureshi, J., Mottram, J.T. Moment-rotation response of nominally pinned beam-to-column joints for frames of pultruded fibre reinforced polymer. Construction and Building Materials. 2015. No. 77. Pp. 396–403.
8. Cooper, C., Turvey, G.J. Effects of joint geometry and bolt torque on the structural performance of single bolt tension joints in pultruded GRP sheet material. Composite structures. 1995. Vol. 32. No. 1-4. Pp. 217–226.
9. Camanho, P.P., Matthews, F.L. Stress analysis and strength prediction of mechanically fastened joints in FRP: a review. Composites Part A: Applied Science and Manufacturing. 1997. Vol. 28. No. 6. Pp. 529–547.
10. Qureshi, J., Mottram, J.T. Behavior of pultruded beam-to-column joints using steel web cleats. Thin-Walled Structures. 2013. Vol. 73. Pp. 48–56.
11. Qureshi, J., Mottram, J.T. Response of beam-of-column web cleated joints for pultruded frames. Journal of Composites for Construction. 2014. Vol. 18. No. 2. Pp.11. URL: http://ascelibrary.org/doi/abs/10.1061/(ASCE)CC.1943-5614.0000392
12. Qureshi, J., Mottram, J.T., Zafari, B. Robustness of simple joints in pultruded FRP frames. Structures. 2015. Vol. 3. Pp. 120–129.
13. Zinovyev, V.S., Ovchinnikov, I.G. Vozmozhnost primeneniya kompozitnykh materialov pri izgotovlenii i montazhe peshekhodnykh mostov [The possible application of composite materials for manufacturing and installation of pedestrian bridges]. Novyye idei novogo veka: materialy mezhdunarodnoy nauchnoy konferentsii FAD TOGU. Khabarovsk: Izd-vo TGU, 2013. Vol. 2. Pp. 278–284.
14. Sorina, T.G., Safonov, A.A., Khayretdinov, A.Kh. Osobennosti primeneniya uglestekloplastika v pultruzionnykh kompozitnykh profilyakh dlya mostostroyeniya [Peculiarities of using carbon glass-reinforced plastic in pultrusion composite profiles for bridge engineering]. Problemy mashinostroyeniya i nadezhnosti mashin. 2010. No. 1. Pp. 58–62.
15. Fedorov, Yu.Yu., Vasilyev, S.V. Traversa dlya P-obraznykh opor liniy elektroperedach iz pultruzionnogo stekloplastika [Traverse for п-shaped poles power lines from pultruded fiberglass]. Innovatsii v nauke. 2017. No. 4(65). Pp. 42–45.
16. Kochunov, Yu.A. Primeneniye kompozitnykh materialov dlya izgotovleniya podderzhivayushchikh konstruktsiy liniy prodolnogo elektrosnabzheniya [Application of composite materials for manufacturing of supporting structures of longitudinal power supply lines]. Transport Urala. 2014. No. 1(40). Pp. 76–80.
17. Mottram, J.T., Zheng, Y. State-of-the-art review on the design of beam-to-column for pultruded frames. Composite Structure. 1996. Vol. 35. No. 4. Pp. 387–401.
18. Coelho, A., Mottram, J.T. A review of the behavior and analysis of bolted connections and joints in pultruded fibre reinforced polymers. Materials and Design. 2015. Vol. 74. Pp. 86–107.
19. Smith, S.J., Parsons, I.D., Hjelmstad, K.D. An experimental study of the behavior of connections for pultruded GFRP I-beams and rectangular tubes. Composite structures. 1998. Vol. 42. No. 3. Pp. 281–290.
20. Nerilli, F., Marino, M., Vairo, G. A numerical failure analysis of multi-bolted joints in FRP laminates based on basalt fibers. XXIII Italian Group of Fracture Meeting, IGFXXIII. Procedia Engineering. 2015. Vol. 109. Pp. 492–506.
21. Lee, Y., Kim, S., Won, Y. Strength evaluation of bolt arrangement in PFRP bolted connection with 2 bolts. J. Korean Soc. Adv. Comp. Struc. 2014. Vol. 5. Pp. 17–22.
22. Chen, C., Hu, D., Liu, Q., Han, X. Evaluation on the interval values of tolerance fit for the composite bolted joint. Composite structures. 2018. Vol. 206. Pp. 628–636.
23. Rosales-Iriarte, F., Fellows, N.A., Durodola, J.F. Experimental evaluation of the effect of clamping force and hole clearance on carbon composites subjected to bearing versus bypass loading. Composite structures. 2011. Vol. 93. No. 3. Pp. 1096–1102.
24. Boscato, G., Casalegno, C., Russo, S., Mottram, J.T. Buckling of built-up columns of FRP C-sections. Journal of Composites for Construction. 2014. Vol. 18. No. 4. Pp. 11–23.
25. Liu, T. Stability behavior of pultruded glass-fiber reinforced polymer I-sections subject to flexure. Pittsburgh, 2017. 270 p.

Contacts:

Marat Salakhutdinov, lider-kazann@yandex.ru
Linur Gimranov, leenur@mail.ru
Ivan Kuznetsov, kuz377@mail.ru
Adel Fakhrutdinov, faxrutdinoff@yandex.ru
Lilia Nurgaleeva, nurgaleevalm@fiberpull.ru